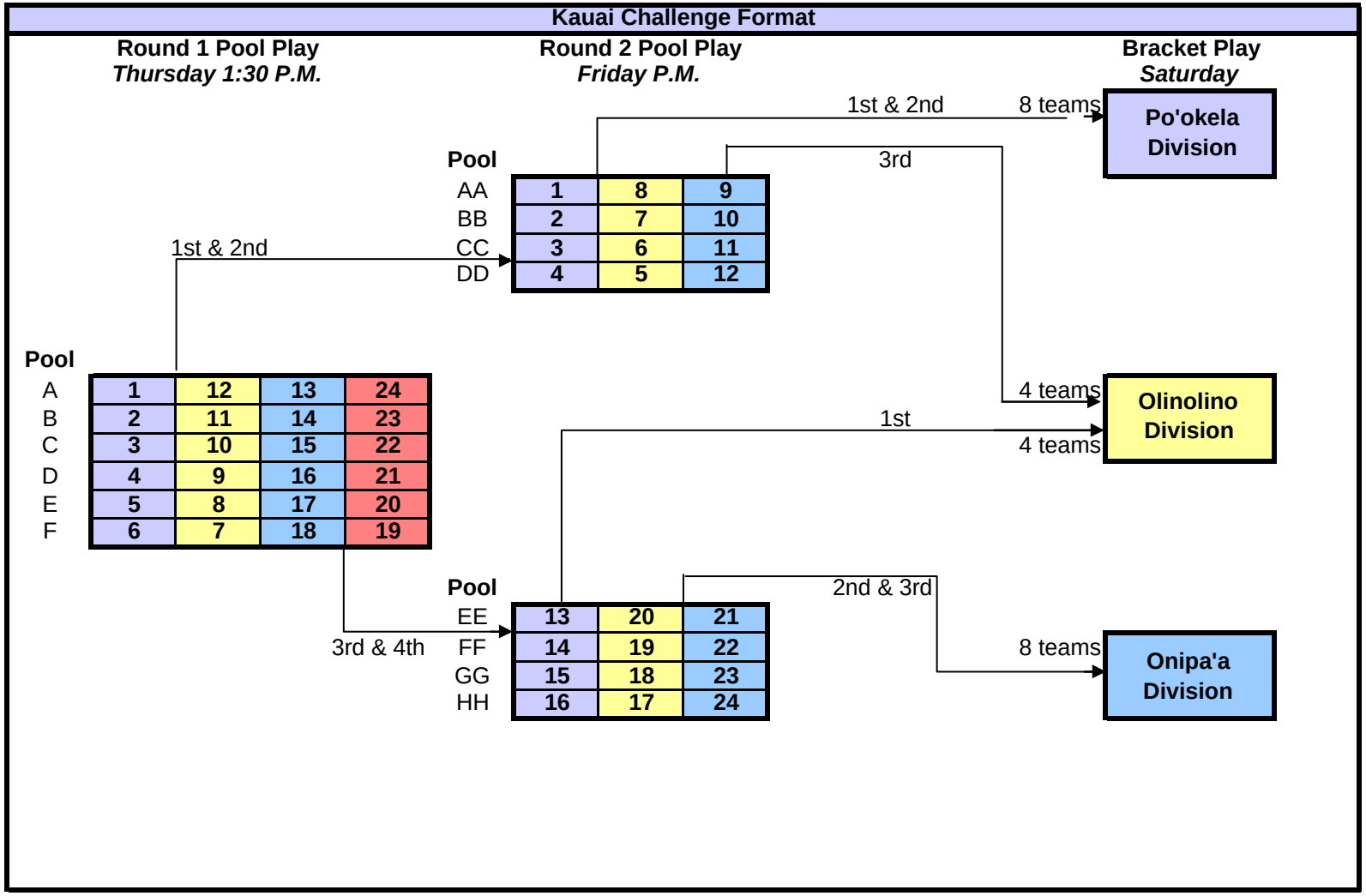Kauai Challenge Volleyball Invitational 2008
General Tournament Play Format